Frame

rev. 22-08-2024

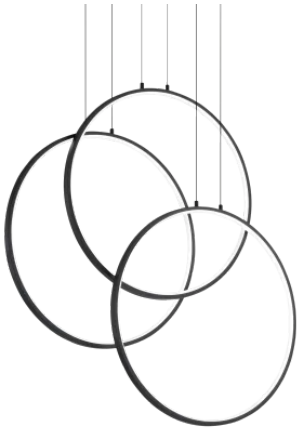

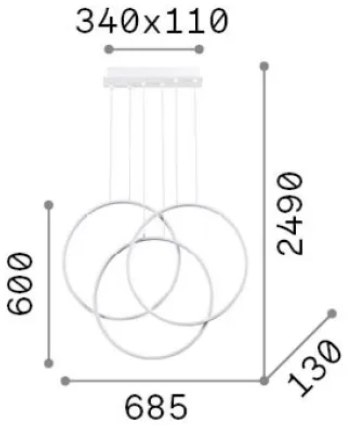

General info

Indoor - Suspensions

Ean	8021696269337
Item	FRAME SP CERCHIO NERO
Installation	Suspensions
Warranty	5 years
Gross weight	4.2 kg
Volume	0.105 m^3

Technical info

Net weight	3.5 kg
Insulation class	I
Protection index	IP20
Compliance	CE
Operating temperature	0° ~ +40 °C
Dimmer	Non-dimmable, On-Off
Power output	220-240 V AC 50/60 Hz
Power supply	In-built, included Replaceable (by qualified operators only), electronic

Source info

Integrated source	Integrated LED module
Repleaceable source	No
Power	LED 82 W
Emission	Direct
Max consuption	max 82 W
Features LED	LED SMD
CCT LED	3000 K
Duration LED (t. 25°c)	30000 h
CRI	> 80
Light beam	120°
Light beam flux	7300 lm
Useful light flux	4640 lm

IDEAL LUX s.r.l.
Via Taglio Destro, 32, 30035 Mirano (Venezia)
Tel +39 041 5790500 | **Fax** +39 041 8872349 | **E-mail** info@ideal-lux.com
www.ideal-lux.com